Arching Effect of Planetary Regolith Simulant under Extraterrestrial Gravities

Ruilin Li[1]; Guoqing Zhou, Ph.D.[2]; and Matthew R. Hall, Ph.D.[3]

Abstract: Attention has been devoted to the construction of off-earth base construction and mineral mining in recent years. This paper studies the influence of extraterrestrial gravities on the arching effect surrounding deeply buried structures in planetary regolith using trapdoor experiments. Off-earth regoliths are physically simulated using a magnetically sensitive planetary regolith simulant, whereas the gravities are simulated by applying a uniform magnetic body force. The results show that the gravity has a significant influence on both the unloading rate for soil pressure on the trapdoor and the reduction in soil pressure. Both soil pressure and normalized soil pressure unload rapidly when moving the trapdoor down at a lower gravity. The unloading rate for soil pressure increases when gravity increases. However, that of the normalized soil pressure decreases. With further increases in gravity, the normalized soil pressure appears to reach a stable state. A theoretical solution for the soil pressure on the trapdoor is proposed which includes the effect of gravity-induced stress level and stress gradient on interparticle friction resistance. The predicted soil pressure demonstrates good agreement with the experimental results. This study provides an approach to estimate the downward loading on trapdoor-like underground structures in off-earth engineering applications. **DOI: 10.1061/(ASCE)AS.1943-5525.0000927.** *© 2018 American Society of Civil Engineers.*

Author keywords: Arching effect; Extraterrestrial gravity; Planetary regolith simulant; Trapdoor; Stress arching.

Downloaded from ascelibrary.org by University of Liverpool on 07/22/25. Copyright ASCE. For personal use only; all rights reserved.

Introduction

The limited resource reserves, increased environmental pollution, and potential nuclear threat on Earth have all promoted planetary exploration in recent decades (Ruess et al. 2006; Bell 2010). In addition to the Moon and Mars, attention has also been devoted to asteroids (Forgan and Elvis 2011; Elvis 2012). Off-earth base construction and mineral mining will be the primary mission when humans first land on these planets and asteroids. However, significantly different environments and geomaterial properties on the surface of the Moon, Mars, or asteroids, brings a series of new challenges in the form of off-earth geotechnical engineering and mining. Previous observations have found that the lunar surface is covered by granular regolith with a thickness of 0–15 m (McKay et al. 1991; Shkuratov and Bondarenko 2001). This lunar regolith features particle radii of 30 μm–1 mm (mean radius 70 μm), and a specific gravity of 2.9–3.4 (Mitchell et al. 1972; Carrier et al. 1973). The lunar regolith possesses a porosity/density-related weak interparticle cohesion, which is believed to result from the electrostatic charge and the ultrahigh vacuum; a similar phenomenon also exists on other planets and asteroids (McKay et al. 1991; Perko et al. 2001; Hicher and Chang 2008). A large portion of the Martian surface is covered by a fine granular regolith with a wide range particle diameters: $\leq$5 μm–256 mm (Arvidson et al. 1989; Moore et al. 1999). The exploration of asteroids, such as asteroid Eros and Ida (Veverka et al. 2000), for example, has led to observations that the surfaces of these small bodies may also be covered by a layer of granular regolith.

The gravity-related mechanical behavior of off-earth regoliths needs to be studied before landing, constructing, or mining on the Moon, Mars, or other planets and asteroids. A series of in situ penetrometer tests was performed on the Moon during the Apollo 15 and Luna 17 missions (Leonovich et al. 1971; Mitchell et al. 1972). In situ mechanical responses of Martian regolith have also been studied (Rover Team 1997; Moore et al. 1999; Sullivan et al. 2011). These in situ tests, however, generally involve high cost, rare opportunity, and complicated operation. An alternative approach was adopted on Earth by way of physical modeling under reproduced extraterrestrial gravities. Sture et al. (1988) demonstrated quite different behavior of Ottawa sand under microgravity by performing triaxial tests in a space shuttle. The gravity-related bearing capacity (Perkins and Madson 1996; Bui et al. 2009; Zou et al. 2015), penetration resistance (Costes et al. 1971; Melzer 1974), and interaction between a wheel and planetary regolith simulants (Oravec et al. 2010; Kobayashi et al. 2010) have all been studied in the last few decades. Boles et al. (1997) and Goodings et al. (1992) modeled gravity-related dynamic excavation.

Soil pressure plays an important role in both terrestrial and extraterrestrial geotechnical engineering. The arching effect is a universal phenomenon that results in a redistribution of soil pressure on underground structures. It was first proposed by Terzaghi (1936) and has been widely studied (e.g., Ladanyi and Hoyaux 1969; Tanaka and Sakai 1993; Chevalier et al. 2012). These studies demonstrated that the arching effect is closely related to the interparticle friction resistance of granular media. Because the interparticle friction is related to the stress level, some physical

[1]Ph.D. Student, State Key Laboratory for Geomechanics and Deep Underground Engineering, China Univ. of Mining and Technology, Xuzhou, Jiangsu 221116, China; Sponsored Researcher, GeoEnergy Research Centre, Faculty of Engineering, Univ. of Nottingham, University Park, Nottingham NG7 2RD, UK. ORCID: https://orcid.org/0000-0002-1771-1568. Email: Ruilin.Li@cumt.edu.cn

[2]Professor, State Key Laboratory for Geomechanics and Deep Underground Engineering, China Univ. of Mining and Technology, Xuzhou, Jiangsu 221116, China (corresponding author). Email: gqz@cumt.edu.cn

[3]Professor, GeoEnergy Research Centre, Faculty of Engineering, Univ. of Nottingham, University Park, Nottingham NG7 2RD, UK; Professor, Environmental Science Centre, British Geological Survey, Nicker Hill, Keyworth, Nottingham NG12 5GG, UK. Email: lazhal@exmail.nottingham.ac.uk

Note. This manuscript was submitted on August 17, 2017; approved on May 2, 2018; published online on August 2, 2018. Discussion period open until January 2, 2019; separate discussions must be submitted for individual papers. This paper is part of the ***Journal of Aerospace Engineering***, © ASCE, ISSN 0893-1321.

Table 1. Physical properties of magnetic particles and quartz particles

Category	Quartz particles	Magnetic particles
Mean particle diameter (μm)	25	0.285
Special surface area (m^2/g)	0.21	6.00–7.00
Bulk density (kg/m^3)	2,650	600
Specific gravity	2.64	2.83
Details	SiO_2: 99.40%; Fe_2O_3: 0.03%; Al_2O_3: 0.20%	Specific saturation magnetization: 60–120 emu/g; coercive force: 4,377–5,173 A/m

models for soil arching have also been performed under high gravities (45g–160g) (e.g., Stone and Wood 1992; Costa et al. 2009; Iglesia et al. 2011). However, these results may not be directly adapted to off-earth construction or mining because of (1) low gravity conditions, (2) porosity/density-dependent weak interparticle cohesion, and (3) fine-grained regolith. This research uses trapdoor tests to study the effect of extraterrestrial gravities on the arching effect of planetary regolith. Off-earth regoliths are physically simulated using a magnetically sensitive planetary regolith simulant. The extraterrestrial gravities are generated by applying a uniform magnetic body force to the planetary regolith simulant. Finally, a theoretical solution for soil pressure on the trapdoor is proposed after accounting for the effect of gravity-induced stress level and stress gradient on the interparticle friction resistance.

Trapdoor Experiments

Planetary Regolith Simulant

The authors developed a magnetically sensitive planetary regolith simulant to physically model off-earth regoliths. The following typical characteristics of the prototype planetary regoliths were simulated: (1) granular morphology; (2) fine-grained particles; and (3) porosity/density-dependent weak interparticle cohesion. The planetary regolith simulant particles were prepared by bonding Fe_3O_4 magnetic nanoparticles around quartz particles. The quartz particles and magnetic nanoparticles had a diameter ratio approximating 100 to enhance bonding efficiency. Table 1 lists the detailed physical properties of both the magnetic particles and quartz particles.

The planetary regolith simulant was prepared using the following procedures (Fig. 1): (1) cleaning quartz particles; (2) hydrating quartz particles with water vapor and then cooling until the temperature was below 50°C; (3) adding the magnetic particles to quartz particles at a mass ratio of 50%, then stirring for 60 min; and (4) standing for 24 h and sieving out the unbonded magnetic particles.

The grain-size distribution of the planetary regolith simulant was tested by sieving in accordance with the Chinese standard for soil test method GB/T50123-1999 (CSBTS 1999). Fig. 2(a) shows the particle grading curve, which demonstrates a median diameter of 0.048 mm, uniformity coefficient of 2.036, and a coefficient of curvature of 1.097. The specific gravity analysis was performed using a water pycnometer (CSBTS 1999), which gave a value of 2.770. The minimum dry density was tested by using a funnel pouring device to place the planetary regolith simulant in a mold, whereas the maximum dry density was obtained by using a vertically vibrating table (CSBTS 1999). The results showed a maximum and a minimum dry density of 2.006 and 0.035 g/cm^3, respectively, which further led to a minimum and a maximum void ratio of 0.381 and 1.676, respectively (CSBTS 1999). The magnetization of planetary regolith simulant was measured by using a vibrating sample magnetometer (VSM), which demonstrated a critical magnetization field intensity of 105.28 kA/m and a specific saturation magnetization of 37.60 $A \cdot m^2/kg$. This study defined the critical magnetization field as the critical magnetic field intensity beyond which the material is magnetically saturated.

A series of consolidated drained (CD) triaxial tests was performed with a loading rate of 0.2 mm/min and confining pressures of 100–400 kPa. The specimens were 39.1 mm in diameter and 80 mm in height, with a dry density of 1.400 g/cm^3. The standard procedures for specimen preparation and triaxial test were based on the Chinese standard GB/T50123-1999 (CSBTS 1999). Fig. 2(b) demonstrates the relationship between the deviatoric stress and the axial strain of the planetary regolith simulant, which led to a critical friction angle of 28.27 and a cohesion of 0 kPa. The standard consolidation test (CSBTS 1999) was performed under pressures of 0–9 kPa, from which a typical e–p relationship (i.e., void ratio–pressure relationship) of the planetary regolith simulant is obtained [Fig. 2(c)]. A low consolidation pressure was determined in the consolidation test because the maximum pressure in the trapdoor tests of this study was less than 5 kPa.

The porosity/density-dependent weak interparticle cohesion is a typical characteristic of dry planetary regolith. Fig. 2(d) demonstrates the cohesion of lunar regolith obtained from in situ and laboratory tests (Perko et al. 2001), which shows that the cohesion decreased rapidly with increasing porosity (or decreasing density). Previous studies pointed out that this phenomenon may be caused by solar wind–induced electrostatic charging and ultrahigh vacuum–induced particle surface cleanliness (McKay et al. 1991; Perko et al. 2001; Hicher and Chang 2008). This porosity/density-dependent weak interparticle cohesion was simulated by the interparticle magnetic force of the planetary regolith simulant.

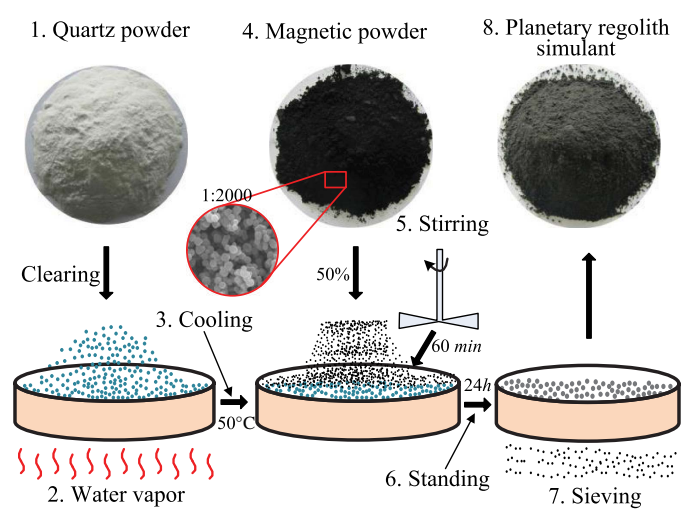

Fig. 1. Preparation procedures of planetary regolith simulant. (Images by Ruilin Li.)

Downloaded from ascelibrary.org by University of Liverpool on 07/22/25. Copyright ASCE. For personal use only; all rights reserved.

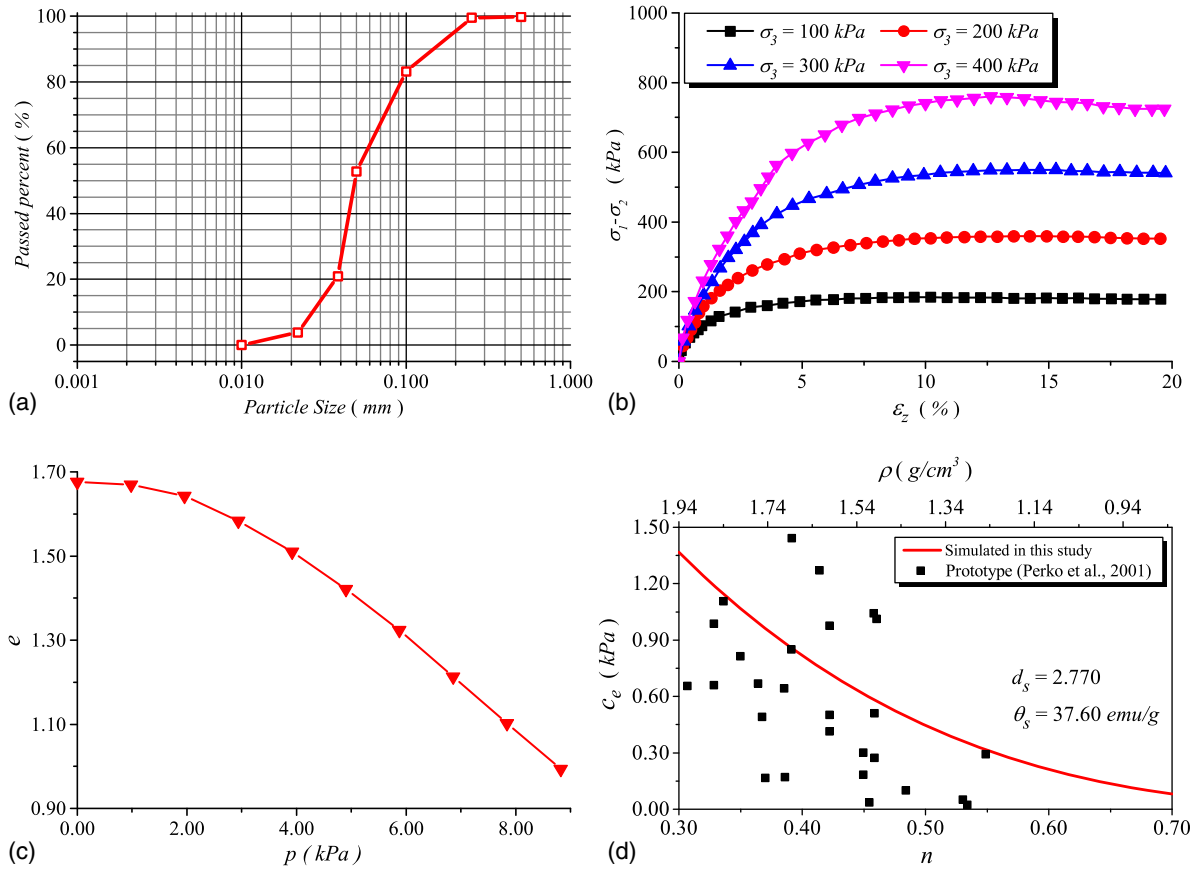

Fig. 2. Properties of planetary regolith simulant: (a) grading curve; (b) deviatoric stress—axial strain relationship; (c) e–p relationship; and (d) comparison of interparticle magnetic force simulated cohesion and prototype cohesion of lunar regolith. (Data from Perko et al. 2001.)

For simplification, assuming that the planetary regolith simulant particles are spherically shaped, the interparticle magnetic force $\mathbf{F}^{cm}$ then can be calculated by

$$\mathbf{F}^{cm} = 3.898 D \mathbf{M}^2 r^2 (1-n)^{4/3} \tag{1}$$

where D = demagnetization factor; $\mathbf{M}$ = magnetization; r = radius; and n = porosity (Eyssa and Boom 1976). This interparticle magnetic force arises after the planetary regolith simulant is magnetized by the external magnetic field.

The magnitude of the interparticle magnetic force in Eq. (1) decreases proportionally to the distance between particles, which can effectively simulate the porosity/density dependency of the prototype weak interparticle cohesion. After counting the specific saturation magnetization ϑ_s ($D = 1/3$ for spherical particles), the simulated weak interparticle cohesion c_e can be expressed as

$$c_e = 0.414 \rho^2 \vartheta_s^2 (1-n)^{4/3} \tag{2}$$

Including the relationship between density and porosity, Eq. (2) can further be expressed as

$$c_e = 0.414 d_s^2 \vartheta_s^2 (1-n)^{10/3} \tag{3}$$

where d_s = specific gravity. The simulated interparticle cohesion is only proportional to the porosity because both the specific gravity and the specific saturation magnetization are constant.

Fig. 2(d) shows the relationships between the simulated weak interparticle cohesion, the porosity, and the density of the planetary regolith simulant. The simulated interparticle cohesion changed from 1.4 to 0.1 kPa when the porosity increased from 0.30 to 0.70, whereas the density decreased from 1.94 to 0.83 g/cm^3. Fig. 2(d) compares the simulated weak interparticle cohesion and that of the prototype lunar regolith. Because the prototype weak interparticle cohesion was 0–1.5 kPa, it can be qualitatively simulated by the interparticle magnetic force of the planetary regolith simulant.

Extraterrestrial Gravities

Extraterrestrial gravities were simulated by applying a magnetic body force to the magnetically saturated planetary regolith simulant (Valles et al. 2005; Luo et al. 2011; Li et al. 2012, 2018). A magnetic device was used to apply the magnetic body force. This magnetic device consisted of a long solenoid and a pair of conjugate short solenoids [Figs. 3(a and b)]. The magnetic device provided a cylindrical experimental space with a diameter of 90 mm and a height of 160 mm. The long solenoid generated a uniform axial magnetic field inside the experimental space. The intensity of this uniform magnetic field could be adjusted from 0 to 128 kA/m with a precision of 0.1 kA/m by controlling the driving current from the power supply regulators [Fig. 3(c)]. The conjugate short solenoids generated a linear axial gradient magnetic field inside the experimental space. The gradient of this linear gradient magnetic field could be adjusted from 0 to 480 kA/m^2 with a precision of 0.3 kA/m^2 by controlling the driving current from the power supply regulators.

The superimposed axial magnetic field inside the experimental space provided (1) a sufficiently large intensity to ensure that the planetary regolith simulant was magnetically saturated, and (2) a constant axial gradient to simulate a constant gravitational

Downloaded from ascelibrary.org by University of Liverpool on 07/22/25. Copyright ASCE. For personal use only; all rights reserved.

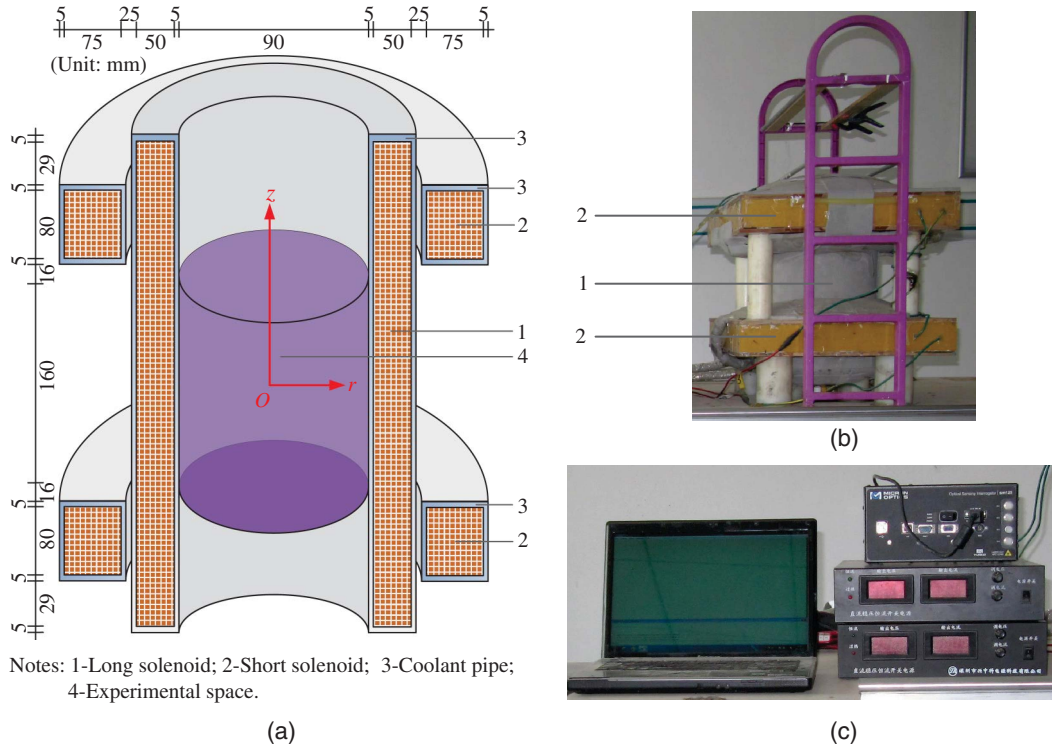

Fig. 3. Extraterrestrial gravity simulation magnetic device: (a) structure and dimension parameters; (b) magnetic device; and (c) power-supply regulators. (Images by Ruilin Li.)

acceleration on planetary regolith simulant. A uniform axial magnetic body force $\mathbf{f^m}$ was applied to the planetary regolith simulant when it was magnetically saturated by the superimposed magnetic field

$$\mathbf{f^m} = \rho\mu_0\vartheta_s\frac{\partial\mathbf{H}}{\partial z} \tag{4}$$

where $\partial\mathbf{H}/\partial z$ = axial gradient of the magnetic field; and μ_0 = vacuum permeability, with a constant value of $4\pi \times 10^{-7}$ H/m. The z-direction in Eq. (4) is fixed in the axial direction of experimental space and originates from its geometric center.

In order to ensure that the planetary regolith simulant can be magnetically saturated, the minimum intensity of the magnetic field in the experimental space should be larger than the critical magnetization field of the planetary regolith simulant.

The presence of the terrestrial gravity $\mathbf{g}$ and the magnetic body force results in a superposed axial stress $\boldsymbol{\sigma}_z$ acting on the planetary regolith simulant

$$\boldsymbol{\sigma}_z = \rho\mathbf{g}z + \rho\mu_0\vartheta_s\frac{\partial\mathbf{H}}{\partial z}z \tag{5}$$

Because the specific saturation magnetization and the gradient of the magnetic field are both independent on the spatial location, Eq. (5) can further be expressed as

$$\boldsymbol{\sigma}_z = \rho\mathbf{g}_m z \tag{6}$$

in which the simulated extraterrestrial gravitational acceleration $\mathbf{g}_m$ is given by

$$\mathbf{g}_m = \mathbf{g} + \mu_0\vartheta_s\frac{\partial\mathbf{H}}{\partial z} \tag{7}$$

The magnetic device unavoidably generated a radial magnetic field in the experimental space; however, it was small enough that its effect on physical modeling was negligible. Specifically, in the region the physical model occupied inside the experimental space (diameter 85.0 mm × height 120 mm), the maximum intensity and radius gradient of the radial magnetic field were 4.50 kA/m and 119.25 kA/m^2, respectively. The maximum intensity was minimal compared with the critical magnetization field of the planetary regolith simulant. Therefore, only a maximum 2.49% (average 1.25%) unexpected body force was caused in the radial direction compared with the simulated gravity.

Experimental Apparatus

A trapdoor experimental apparatus was designed to be applicable for the experimental space of the magnetic device. The apparatus consisted of a cylindrical model box, a base seat, and a strip trapdoor with a shifter [Figs. 4(a and b)]. The model box was made of nonmagnetic polymethyl methacrylate (PMMA). Its inner diameter, wall thickness, and height were 85.0, 3.0, and 500.0 mm, respectively. The trapdoor, with a size of 85 × 8 mm (length× width), was installed at the bottom of the model box. The trapdoor was fixed on the top end of a cylindrical guide bar. The guide bar located in a guide groove inside the base seat and slid freely in the axial direction. Movement of the trapdoor was controlled by a slip sheet with a ladder-type varied thickness. The slip sheet was placed on the bottom of the guide bar to achieve trapdoor displacements of 0.0, 0.5, 1.0, 1.5, and 2.0 mm in sequence. A locating dowel penetrated the base seat and guide bar to ensure that the trapdoor was movable only when the dowel was removed. The trapdoor, guide

Downloaded from ascelibrary.org by University of Liverpool on 07/22/25. Copyright ASCE. For personal use only; all rights reserved.

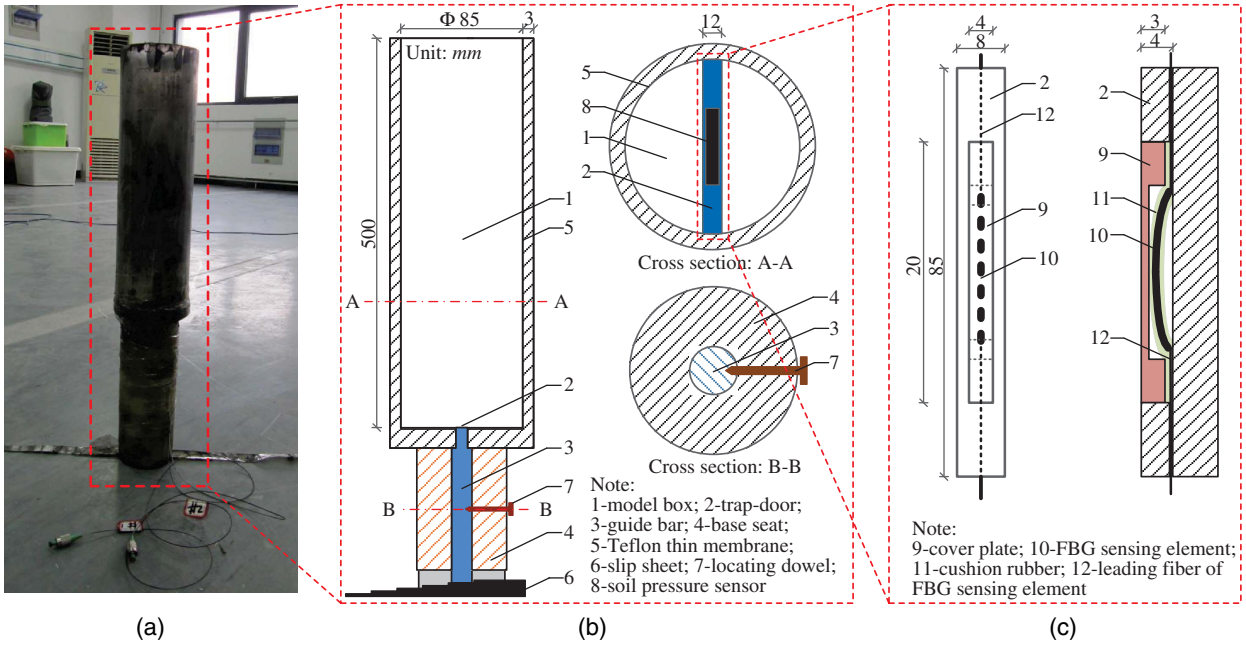

Fig. 4. Trapdoor experimental apparatus: (a) appearance (image by Ruilin Li); (b) structure; and (c) substructure of soil pressure sensor.

bar, and the dowel were made of PMMA, the slip sheet was made of Teflon, and the base seat was made of polyamide. All of those materials are nonmagnetic so that the apparatus did not cause any electromagnetic interference in the experimental space.

To avoid the influence of the magnetic field, a soil pressure sensor was designed using a fiber Bragg grating (FBG) sensing element. The soil pressure sensor was embedded inside the trapdoor to make sure it did not disturb in the planetary regolith simulant [Fig. 4(c)]. The sensor had a measurement range of 0–10 kPa and a precision of ±0.16% of full scale.

Trapdoor Schedule

Future planetary bases may need to be buried deeply to avoid potential damage from the extreme environment of the ground surface. Minerals will also be unavoidably mined in the deep underground. Therefore, a deep-buried condition of the trapdoor was considered by controlling the ratio of the cover depth of planetary regolith simulant to trapdoor width to 15.0. This study applied extraterrestrial gravities of $0.3g$–$3g$. The relative density of the planetary regolith simulant in trapdoor tests was determined to be 54%, so that (1) the corresponding void ratio and density, 0.979 and 1.400 $\mathrm{g/cm^3}$, respectively, were representative of the prototype planetary regoliths; and (2) the applied extraterrestrial gravities of $0g$–$3.0g$ did not cause any unexpected secondary consolidation of the planetary regolith simulant with this relative density.

The boundary effect caused by the apparatus geometry and trapdoor dimensions was minimized. Papamichos et al. (2001) and Iglesia et al. (2011) reported that the boundary effect in trapdoor tests disappears when the ratio of the diameter of the model box to the trapdoor width exceeds 5.0 and the ratio of the trapdoor width to the diameter of soil particles exceeds 20. In this study the box diameter:trapdoor width ratio was 10.6 and the trapdoor width: soil-particle diameter ratio was 166.7. Therefore, the potential effect of the apparatus geometry and trapdoor dimensions on the test results can be ignored in this study. Furthermore, a Teflon membrane with a thickness of 0.1 mm was pasted on the inner surface of the model box to minimize the effect of boundary friction.

Two groups of validation tests were carried out to verify the reliability of the magnetic device, experimental apparatus, and the soil pressure sensor, and to check the potential boundary effect. Then seven groups of trapdoor tests were performed at extraterrestrial gravities of $0.3g$, $0.6g$, $1.0g$, $1.5g$, $2.0g$, $2.5g$, and $2.9g$. The control parameters of the magnetic device used in validation tests and trapdoor tests (Table 2) were determined by Eq. (7) according to the magnetization characteristic of the planetary regolith simulant. In Table 2, $\partial\mathbf{H}/\partial z$ refers to the gradient of the linear axial gradient magnetic field in the experimental space, and H_{zcen} refers to the intensity of the uniform axial magnetic field.

Test Procedures

The validation tests were performed according to following procedures: (1) putting the model box into the experimental space of the magnetic device and fixing the trapdoor by the inserting dowel; (2) filling the preweighed planetary regolith simulant into the model box at the terrestrial gravity and compacting slightly to reach a relative density of 54% and a thickness of 40 mm; (3) repeating

Table 2. Control parameters of the magnetic device used in trapdoor tests

	g_m (g)						
Parameter	0.30	0.60	1.00	1.50	2.00	2.50	2.90
$\partial\mathbf{H}/\partial z$ ($\mathrm{kA \cdot m^{-2}}$)	−145.19	−82.96	0	103.70	207.41	311.11	394.08
H_{zcen} ($\mathrm{kA \cdot m^{-1}}$)	119.80	113.58	105.28	115.65	126.02	136.39	144.69

Downloaded from ascelibrary.org by University of Liverpool on 07/22/25. Copyright ASCE. For personal use only; all rights reserved.

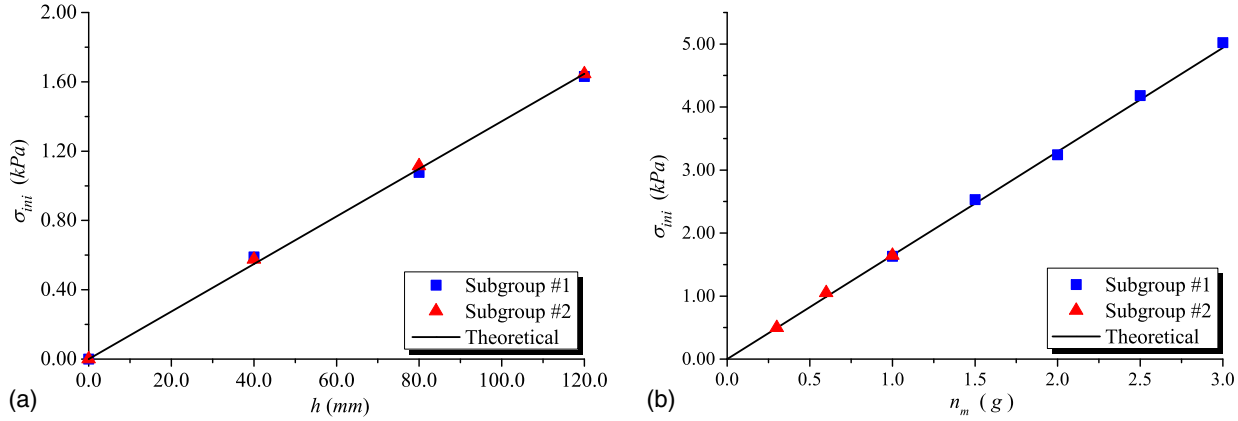

Fig. 5. Evolution of soil pressure on bottom of model box: (a) during filling planetary regolith simulant; and (b) during applying extraterrestrial gravities.

Step 2 until the height of planetary regolith simulant reached 120 mm; and (4) increasing the gravity applied to the first subgroup from $1.0g$ to $2.9g$ successively by using the magnetic device, and decreasing the gravity applied to the second subgroup from $1.0g$ to $0.3g$ successively. The soil pressure on the bottom of the model box was monitored during the whole process, and was further compared with the theoretical soil pressure. The theoretical soil pressure was calculated by

$$\boldsymbol{\sigma}_{\text{ini}} = \rho \mathbf{g}_m h \tag{8}$$

where h = cover depth of the planetary regolith simulant; and ρ = density of the planetary regolith simulant.

The simulated extraterrestrial gravities in previous procedures were applied with the following steps: (1) obtaining the predetermined intensity (H_{zcen}) and gradient ($\partial \mathbf{H}/\partial z$) of the magnetic field from Table 2; (2) applying the uniform magnetic field, with an intensity of H_{zcen}, to the physical model by the power supply regulators; and (3) applying the linear gradient magnetic field, with a gradient of $\partial \mathbf{H}/\partial z$, to the physical model by power supply regulators. The planetary regolith simulant was magnetically saturated after Step 2, and the simulated gravities were further applied at Step 3.

The trapdoor tests were performed according to the following procedures: (1) preparing the physical model with the same procedures as in Steps 1–3 of the validation tests; (2) applying the predetermined extraterrestrial gravity to the cover planetary regolith simulant; (3) removing locating dowel to make sure that the trapdoor was movable in the following step; and (4) moving down the trapdoor with an accumulated displacement of 0.5, 1.0, 1.5, and 2.0 mm in sequence by moving the slip sheet. The soil pressure acting on the trapdoor was recorded by the soil pressure sensor throughout the process, and is further analyzed in the following sections.

Experimental Results

Validation of Experimental System

Fig. 5(a) shows the evolution of soil pressures on the bottom of the model box during filling the planetary regolith simulant in the validation tests. The measured soil pressure demonstrated good agreement with the theoretical value. This agreement suggests that the soil pressure sensor had good working performance at the terrestrial gravity condition. It further indicates that both the boundary friction and the apparatus geometry–induced boundary effect of the physical models were negligible.

Table 3. Parallel test reliability of soil pressures on trapdoor

	Relative deviation				
g_m (g)	0.0 mm (%)	0.5 mm (%)	1.0 mm (%)	1.5 mm (%)	2.0 mm (%)
0.30	4.64	3.84	3.89	18.75	3.48
1.00	3.29	5.11	1.21	5.53	1.22
2.50	1.17	5.69	0.10	1.42	5.02

Fig. 5(b) demonstrates the evolution of soil pressure on the bottom of the model box when adjusting extraterrestrial gravities in the validation tests, in which n_m is the ratio of the extraterrestrial gravity to the terrestrial gravity (i.e., $n_m = g_m/g$). The measured soil pressures also showed good agreement with the theoretical values. This indicates that the expected extraterrestrial gravities were generated inside the planetary regolith simulant. Meanwhile, the soil pressure sensor proved to have good working performance under the magnetic field.

The test reliability was checked by a series of parallel trapdoor tests. Table 3 gives the relative deviations of measured soil pressures on the trapdoor at $0.3g$, $1.0g$, and $2.5g$. Nearly all relative deviations varied by 0–6.0% under various gravities except for one group that reached 18.75%. Because an acceptable random deviation may unavoidably exist, the soil pressure on the trapdoor showed good repeatability in both the terrestrial and the extraterrestrial gravity conditions.

Evolution of Soil Pressure Related to Trapdoor Displacement

Fig. 6(a) demonstrates the relationship between the soil pressure on the trapdoor and the trapdoor displacement. As with the results of the conventional trapdoor tests, the soil pressure showed a significant unloading when the trapdoor was moved down under various extraterrestrial gravities. However, an obvious difference was that all of the soil pressures demonstrated a continuous decrease even after the trapdoor displacement reached a large value of 2.0 mm. The trapdoor may need a considerably larger displacement before the soil pressure acting on it reaches a minimum state. This minimum soil pressure state, which generally appears at a small trapdoor

Downloaded from ascelibrary.org by University of Liverpool on 07/22/25. Copyright ASCE. For personal use only; all rights reserved.

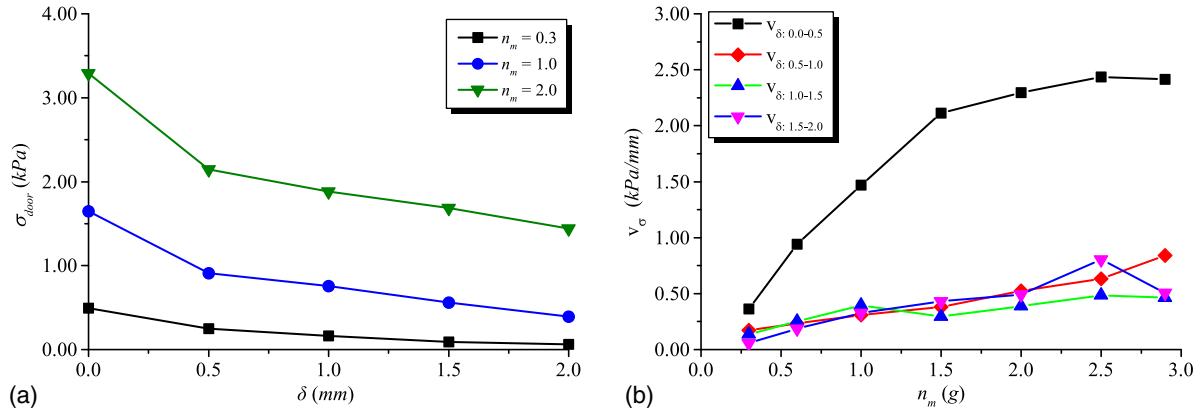

Fig. 6. Evolution of soil pressure on trapdoor with respect to trapdoor displacement: (a) relationship between soil pressure and trapdoor displacement; and (b) relationship between secant rate of unloading for soil pressure and gravity.

displacement, has been reported in the literature (e.g., Papamichos et al. 2001; Chevalier et al. 2012). It is widely accepted that the minimum soil pressure appears when the slip surfaces in soil reach the ground surface. A statistical analysis of previous studies found that all trapdoor cover depths were less than 6 times the trapdoor width; i.e., shallow-buried conditions were considered. The deep-buried condition in this study, however, made it more difficult for slip surfaces to get through the planetary regolith simulant and reach the ground surface. This appears to have resulted in the absence of the minimum soil pressure at a larger trapdoor displacement. Meanwhile, the weak interparticle cohesion may also contribute to this situation.

Fig. 6(a) further suggests that the reductions in soil pressure on the trapdoor were related to the gravity. Significantly more soil pressure unloaded at the same trapdoor displacement when the gravity increased. The unloading of soil pressure can be divided into two stages: (1) the rapidly unloading stage when the trapdoor is moved down from 0 to 0.5 mm; and (2) the continuously unloading stage when the trapdoor is moved down from 0.5 to 2.0 mm. The unloading of soil pressures in the second stage was significantly slower than that in the first stage [Fig. 6(a)]. Furthermore, a secant rate of unloading for soil pressure with respect to the trapdoor displacement is defined by

$$v_{\delta:\delta_1-\delta_2} = \frac{\sigma_{\text{door}}|_{\delta_1} - \sigma_{\text{door}}|_{\delta_2}}{\delta_1 - \delta_2} \tag{9}$$

where $\sigma_{\text{door}}|_{\delta_1}$ and $\sigma_{\text{door}}|_{\delta_2}$ = soil pressures on the trapdoor when the trapdoor displacement equals δ_1 and δ_2, respectively. Fig. 6(b) gives the relationship between the secant rate of unloading for soil pressure and the gravity. The secant rate increased quickly at first and then tended to stabilize when the gravity increased in the first stage. However, the secant rate appeared to maintain a slow and continuous increase in the second stage.

The relative reduction in soil pressure was analyzed by normalizing the soil pressure with the initial geostatic pressure (the initial soil pressure acting on the trapdoor after applying the extraterrestrial gravity g_m) and normalizing the trapdoor displacement with the trapdoor width. Fig. 7(a) shows the relationship between the normalized soil pressure on the trapdoor and the normalized trapdoor displacement. The normalized soil pressure decreased nonlinearly when the normalized trapdoor displacement increased. The decrease further demonstrated a gravity dependency. A significantly larger normalized soil pressure remained on the trapdoor at larger gravity. The unloading of the normalized soil pressure with respect to the normalized trapdoor displacement can also be divided into two stages according to its unloading rate. The first stage showed rapid unloading when the normalized trapdoor displacement increased from 0 to 6.30%. The second stage, however, showed a slow and continuous unloading until the normalized trapdoor displacement reached 25.0%.

A normalized secant rate of unloading for soil pressure on the trapdoor is defined by replacing the soil pressure and trapdoor

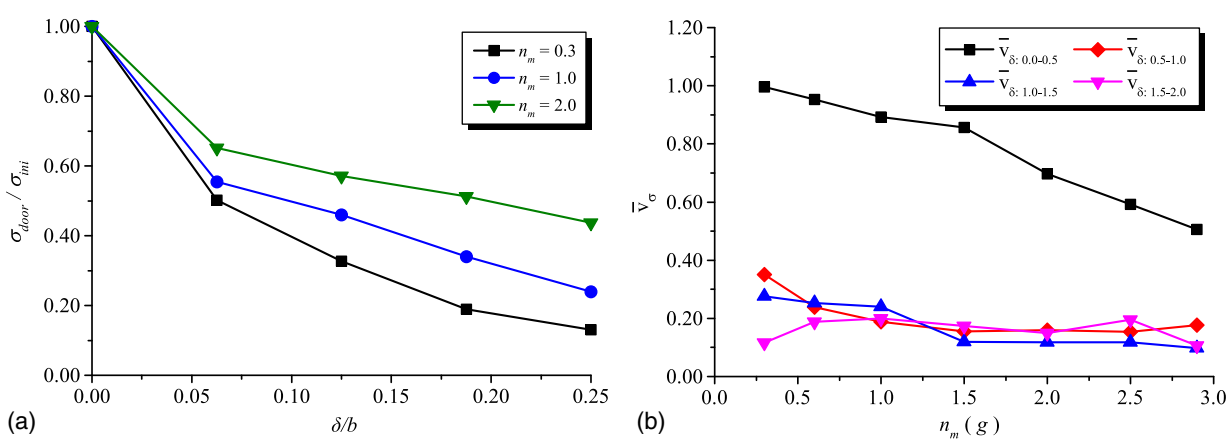

Fig. 7. Evolution of normalized soil pressure on trapdoor: (a) relationship between normalized soil pressure and normalized trapdoor displacement; and (b) relationship between normalized secant rate of unloading for soil pressure on trapdoor and gravity.

Downloaded from ascelibrary.org by University of Liverpool on 07/22/25. Copyright ASCE. For personal use only; all rights reserved.

displacement in Eq. (9) with their normalized quantities. Fig. 7(b) shows the relationship between the normalized secant rate of unloading for soil pressure and the gravity. The normalized secant rates in the first stage were significantly larger than those in the second stage. All rates in both stages decreased when the gravity increased. However, the normalized secant rates demonstrated a significantly smaller reduction in the second stage.

Iglesia et al. (2011) reported a break point for trapdoor displacement after which the rate of unloading for soil pressure on the trapdoor decreases dramatically. The decrease in soil pressure in Fig. 7(a) slowed obviously when the normalized displacement exceeded 6.3%. This indicates that the break point appears to be near 6.3%. On the other hand, this break point also showed a gravity dependency. With the increase in gravity, Fig. 7(b) demonstrates a decreasing difference between normalized secant rates of unloading for soil pressure in the first and second stages. This suggests that the break point becomes unobvious when the gravity is large enough, i.e., a gradual reduction in normalized soil pressure appears to occur between the two stages. This conclusion is also supported by numerical trapdoor simulations performed by Chen (2014) under various gravities.

Evolution of Soil Pressure Related to Gravity

Fig. 8(a) show the relationship between the soil pressure on the trapdoor and the gravity. Before moving the trapdoor down, the initial geostatic soil pressure on the trapdoor increased linearly when the gravity increased. The soil pressures on the trapdoor at different trapdoor displacement levels (nonzero) all demonstrated a nonlinear increase along with the increasing gravity. With the increase in gravity, the reduction in soil pressure increased at first and was followed by nearly equivalent values at a certain trapdoor displacement. Meanwhile, the retained soil pressure increased when the gravity increased.

The rate of increase of soil pressure on the trapdoor with respect to gravity is defined by

$$v_g = \frac{\Delta\sigma_{\text{door}}}{\Delta n_m} \tag{10}$$

where $\Delta\sigma_{\text{door}}$ = increment of the soil pressure on the trapdoor; and Δn_m = increment of n_m. Furthermore, Fig. 8(b) shows the relationship of the rate of increase of soil pressure and the gravity at different trapdoor displacements. The rate of increase for the initial geostatic soil pressure fluctuated slightly. This appears to result from the measurement deviation of the soil pressure and other system deviations of the apparatus.

Fig. 8(b) demonstrates that the rate of increase for soil pressure on the trapdoor increased when the gravity increased. Meanwhile, the rate of increase for soil pressure showed a trapdoor displacement dependency at the lower gravities. It had significantly larger values at small trapdoor displacements. However, this displacement dependency became unobvious with the increase in gravity. The rates of increase for soil pressure finally tended to be equivalent to that of the initial geostatic soil pressure. This is seen in Fig. 8(a), in which the soil pressure–gravity curves tend to be parallel to the initial geostatic soil pressure–gravity curve when the gravity was large enough. These observations indicate that the reduction in soil pressure on the trapdoor increases at first, followed by a stable value when the gravity increases. This gravity-related unloading was observed at all the trapdoor displacement stages.

Fig. 9(a) shows the relationship between the normalized soil pressure on the trapdoor and the gravity. The normalized soil pressure increased when the gravity increased at different trapdoor displacement stages. With the further increase in gravity, the normalized soil pressure tended to approach the initial geostatic soil pressure. This suggests that the increased gravity restricts the transfer efficiency of the normalized soil pressure on the trapdoor. On the other hand, a gravity-related rate of increase for the normalized soil pressure was also observed. The difference between the normalized soil pressures at different trapdoor displacement stages ($\delta/b = 6.3\%$–25.0%) decreased significantly when the gravity increased.

A normalized rate of increase for soil pressure on the trapdoor with respect to the gravity was defined by substituting the normalized soil pressure for the soil pressure in Eq. (10). Fig. 9(b) shows the relationship between this normalized rate of increase and the gravity. With the increase in gravity, the normalized rate of increase appeared to have no obvious change at a normalized trapdoor displacement of up to 6.3%. However, it demonstrated a statistical decrease when the normalized trapdoor displacement exceeded 6.3%. On the other hand, there was a large difference between the normalized rates of increase for soil pressure at different trapdoor displacements when a lower gravity was applied. However, this difference decreased significantly and finally tended to disappear with the increase in gravity. This suggests that the normalized soil pressure may reach and finally remain at a stable value when the gravity is sufficiently large. This conjecture is also supported by the trapdoor experiments performed by Iglesia et al. (2011),

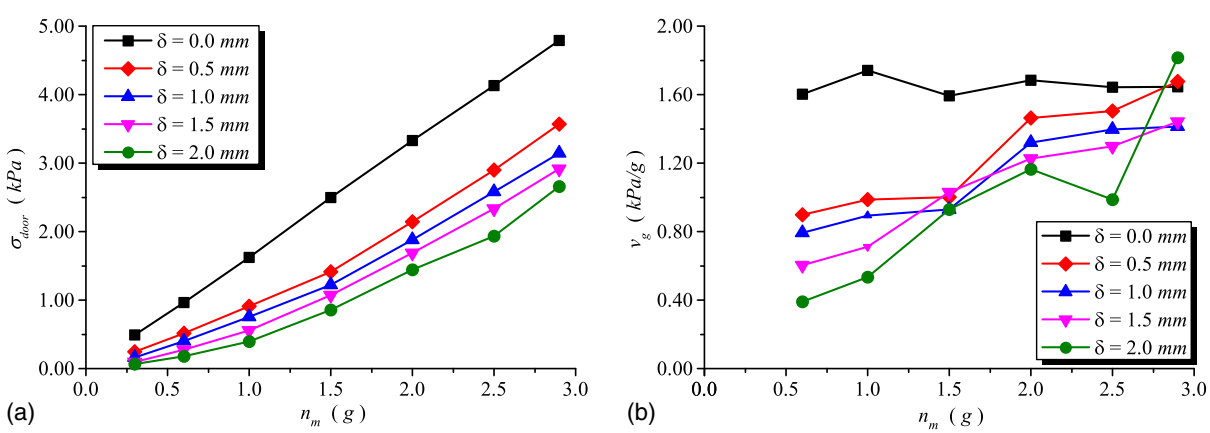

Fig. 8. Evolution of soil pressure on trapdoor with respect to gravity: (a) relationship between soil pressure and gravity; and (b) relationship between rate of increase for soil pressure and gravity.

Downloaded from ascelibrary.org by University of Liverpool on 07/22/25. Copyright ASCE. For personal use only; all rights reserved.

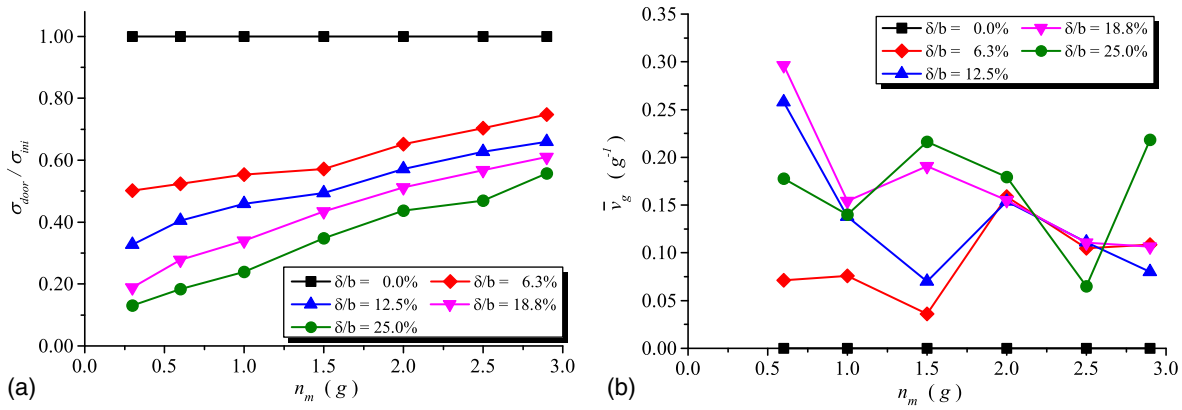

Fig. 9. Evolution of normalized soil pressure on trapdoor with respect to gravity: (a) relationship between normalized soil pressure and gravity; and (b) relationship between normalized rate of increase for soil pressure and gravity.

which demonstrated a consistent normalized soil pressure at gravities of $40g$ and $80g$.

Theoretical Considerations

The experimental study observed a gravity-related soil pressure on the trapdoor. Meanwhile, the planetary regolith simulant above the deeply buried trapdoor demonstrated a nonlimit equilibrium state even after the trapdoor reached a large displacement. The current theories cannot satisfactorily predict the observed soil pressures because (a) most theories only focus on the minimum and the ultimate soil pressures; and (b) they only account for the gravity in the initial geostatic soil pressure (e.g., Marston and Anderson 1913; Terzaghi 1943; Handy 1985; Iglesia et al. 2014). This section presents a theoretical solution to take into account the effect of gravity on soil arching. This solution ignores the porosity/density-related weak interparticle cohesion based on following considerations: (1) because of the sensitive porosity/density dependency, no effective constitutive model for planetary regolith currently accounts for this kind of weak interparticle cohesion; and (2) both the in situ and laboratory tests demonstrated that only 0–1.5 kPa weak interparticle cohesion existed for the planetary regoliths, and thus ignoring its influence on the material behavior is acceptable for engineering purpose. Future work may seek to develop an effective constitutive model for the planetary regoliths to describe this porosity/density-sensitive weak interparticle cohesion.

Effect of Gravity on Soil Strength

The soil arching essentially transfers the soil pressure from the yielding mass to the adjoining stationary area (Terzaghi 1943). This transfer behavior is closely related to the interparticle friction resistance of granular materials. Thus, the effect of gravity on soil arching is considered by means of the peak internal friction angle of planetary regolith simulant. The peak internal friction angle φ consists of the critical friction angle φ_c and the dilation angle ψ (Bolton 1986)

$$\varphi = \varphi_c + 0.8\psi \tag{11}$$

Furthermore, Bolton (1986) gave the effect of stress level on dilation angle of geomaterials

$$\psi = \frac{25}{4}[I_D(10 - \ln p) - 1] \tag{12}$$

where p = mean effective stress; and I_D = relative density.

Previous studies have shown that the gravity-induced stress gradient also has a significant influence on the interparticle friction resistance of granular materials (Sture et al. 1988; R. Li et al. "Behaviour of Granular Materials under Gravity-Induced Stress Gradient: A Numerical Investigation," submitted, *Acta Geotechnica*). The relationship between the gravity and the critical friction angle and the dilation angle can be fitted according to Li's results

$$\varphi_c = \bar{\varphi}_c(0.9 + 0.1e^{-\lambda_1 g_m}) \tag{13}$$

$$\psi = \bar{\psi}e^{-\lambda_2 g_m} \tag{14}$$

where $\bar{\varphi}_c$ and $\bar{\psi}$ = critical internal friction angle and dilation angle at $0g$ condition, respectively. The fitting coefficient λ_1 and λ_2 may be physically related to the stress level, the relative density, and other quantities; further studies are still needed to confirm this. On the other hand, these two coefficients can be obtained easily by fitting the relationships between the critical friction angles, the dilation angles, and the gravities using Eqs. (13) and (14), in which the gravity-related critical friction angles and dilation angles can be obtained by the triaxial tests at various gravities.

Because the weak interparticle cohesion is ignored, the shear strength of the planetary regolith simulant adopted in the trapdoor tests is only related to the peak internal friction angle. The presence of gravity leads to a vertical gradient dilation angle of the planetary regolith simulant above the trapdoor, as expressed by

$$\psi(z) = \frac{25}{4}\left\{I_D\left[10 - \ln\left(\frac{1+2K_0}{3}\rho g_m z\right)\right] - 1\right\}e^{-\lambda_2 g_m} \tag{15}$$

where K_0 = lateral earth pressure coefficient at rest; and z = depth with respect to the ground surface. According to Eq. (11), a gradient distributed peak internal friction angle of the planetary regolith simulant is further caused.

Soil Arching and Basic Assumptions

The planetary regolith simulant initially remains in the k_0 state. The part of planetary regolith simulant in the area of $O_1O_2O_4O_3$ decreases when the trapdoor is moved down with a displacement of δ_1 [Fig. 10(a)]. The reduction in lateral restriction results in a dilation of the lateral adjoining planetary regolith simulant at first, which is followed by an obliquely downward movement because of the interparticle friction resistance. Meanwhile, the planetary regolith simulant far from the trapdoor in the horizontal direction remains stationary because of the restriction from the bottom boundaries. Consequently, a pair of curved slip surfaces [O_1CA

Downloaded from ascelibrary.org by University of Liverpool on 07/22/25. Copyright ASCE. For personal use only; all rights reserved.

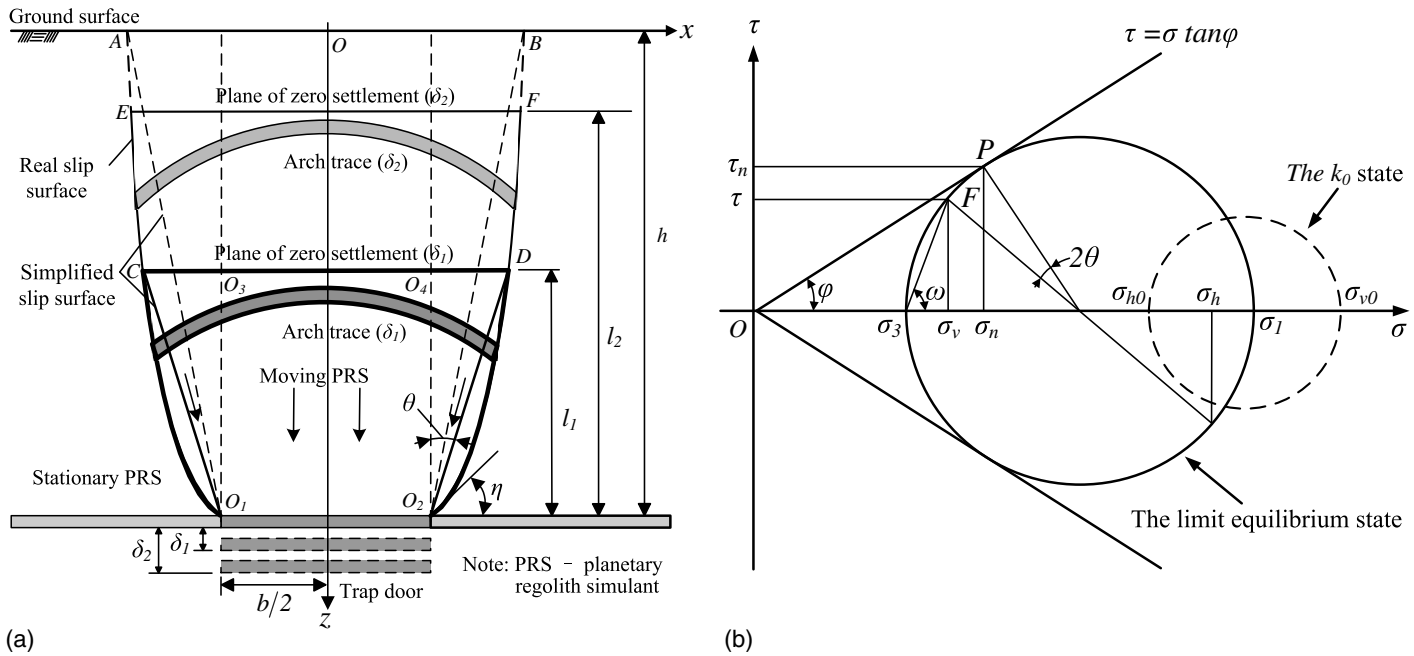

Fig. 10. Stress arching of planetary regolith simulant above trapdoor: (a) evolution of arch trace and slip surfaces; and (b) stress states of planetary regolith simulant on slip surfaces.

and O_2DB in Fig. 10(a), with vertical height l_1] is formed between the moving and stationary planetary regolith simulant (Terzaghi 1943), at the top of which is the plane of zero settlement. The planetary regolith simulant above the plane of zero settlement remains in the k_0 state, whereas the planetary regolith simulant beneath it reaches the limit equilibrium state.

According to previous studies, the nonproportional unloading between the vertical and horizontal stresses results in a rotation of the principal stress axes (Terzaghi 1943; Handy 1985; Chevalier et al. 2012). This further leads to the formation of a stress arching inside the planetary regolith simulant in the region surrounded by the trapdoor, slip surfaces, and the plane of zero settlement. The stress arching transfers part of upper load from the moving planetary regolith simulant to adjoining stationary areas, after which an equilibrium state is reached. With further dropping of the trapdoor, this equilibrium state is broken. The slip surfaces therefore extend upward again to form a new stress arching, and after that a new equilibrium state is reached. The breaking and rebuilding of the stress arching and the equilibrium state are repeated constantly in the process of moving the trapdoor down until the slip surfaces reach the ground surface.

The following assumptions were considered in developing the theoretical solution for soil pressure on the trapdoor:

1. A pair of parabolic slip surfaces arises inside the planetary regolith simulant, which start at the edges of the trapdoor and end at the ground surface. The interparticle friction resistance on slip surfaces is fully mobilized.
2. Rotation of the principal stress axes results in the formation of a stress arching above the trapdoor, whose trace is coincident with the trace of major principal stress.
3. The trace of the stress arching is assumed to be circular under both the nonlimit and limit equilibrium states (Harrop-Williams 1989).
4. The failure of the planetary regolith simulant obeys the Mohr–Coulomb criterion. The planetary regolith simulant surrounded by slip surfaces, the plane of zero settlement, and the trapdoor reach the limit equilibrium state.

Gravity-Related Slip Surface

According to the first assumption, the slip surfaces can be mathematically described as

$$z = -\frac{\tan\eta}{b}x^2 + \left(h + \frac{b}{4}\tan\eta\right) \tag{16}$$

where b = width of trapdoor; h = cover depth of planetary regolith simulant above the trapdoor; and η = initial inclination of the slip surfaces, $\pi/4 + \varphi/2$ (Guo and Zhou 2013). Because a gravity-related peak internal friction angle is adopted, the initial inclination of the slip surface can further be expressed as

$$\eta = \frac{\pi}{4} + \frac{\varphi_{cv}}{2} + \frac{5}{2}\left\{I_D\left[10 - \ln\left(\frac{1+2K_0}{3}\rho g_m h\right)\right] - 1\right\}e^{-\lambda_2 g_m} \tag{17}$$

Directly adopting the parabolic slip surfaces results in a complicated second-order implicit differential equation for the soil pressure on the trapdoor; an analytical solution seems unlikely. Alternatively, a pair of simplified straight slip surfaces was adopted to approximate the parabolic slip surfaces. The simplified slip surfaces share the same starting and ending points as parabolic slip surfaces [Fig. 10(a)], according to which the inclination of the simplified slip surfaces θ can be expressed as

$$\theta = \arctan\left(\sqrt{\frac{b}{l\tan\eta} + \frac{b^2}{4l^2}} - \frac{b}{2l}\right) \tag{18}$$

in which l = height of parabolic slip surfaces.

Gravity-Related Stress States on Slip Surface

Fig. 10(b) shows the stress states of a material point located on the slip surfaces when moving the trapdoor down. The slip surfaces initially arise at the edges of trapdoor when the Mohr stress circle begins to contact the failure envelope. Suppose that the slip

Downloaded from ascelibrary.org by University of Liverpool on 07/22/25. Copyright ASCE. For personal use only; all rights reserved.

surfaces extend to a height of l when the trapdoor displacement reaches δ [Fig. 10(a)]. According to Fig. 10(b), the gravity-related rotation angle of principal stress axes ω can be expressed as

$$\omega = \frac{\pi}{4} + \frac{\varphi}{2} + \theta \tag{19}$$

A differential strip abcd was adopted to analyze the stress states on slip surfaces and the stress arching [Figs. 11(a and c)]. According to the previous assumptions, a circular stress arching (with a radius of R) is formed on this differential strip. The stress state on the lateral surface of abcd can be described by the vertical stress σ_v, the horizontal stress σ_h, and corresponding shear stress τ [Fig. 10(b)]

$$\sigma_h = \sigma_1 \sin^2\omega + \sigma_3 \cos^2\omega \tag{20}$$

$$\sigma_v = \sigma_1 \cos^2\omega + \sigma_3 \sin^2\omega \tag{21}$$

$$\tau = \frac{\sigma_1 - \sigma_3}{2} \sin 2\omega \tag{22}$$

where σ_1 and σ_3 = major and minor principal stresses, respectively.

A second-order differential element efmn on stress arching is further adopted (with an inclination of ϕ with respect to the horizontal plane) [Figs. 11(a and b)]. The stress arching results in a vertical stress σ_v' on element efmn

$$\sigma_v' = \sigma_1 \cos^2\phi + \frac{\sigma_1}{K_p} \sin^2\phi \tag{23}$$

The average vertical stress $\bar{\sigma}_v$ on the top surface of the differential strip abcd then can be obtained by integrating Eq. (23) on its width b_z, as expressed by

$$\bar{\sigma}_v = \frac{\int_{\omega}^{2\pi-\omega} \sigma_v' db}{b_z} = \sigma_1 \frac{(K_p - 1)\cos^2\omega + 3}{3K_p} \tag{24}$$

where K_p = Rankine passive earth pressure coefficient.

On the other hand, the effective normal stress σ_n and shear stress τ_n on the lateral surface of the differential strip abcd can both be obtained according to Fig. 10(b) as

$$\sigma_n = \sigma_v \cos^2\theta + \sigma_h \sin^2\theta + \tau \sin 2\theta \tag{25}$$

$$\tau_n = \sigma_n \tan\varphi \tag{26}$$

Finally, the relationship between the effective normal stress on the lateral surface of the differential strip abcd and the average vertical stress on its top surface is obtained by substitution of Eqs. (20)–(22) and (24) into Eq. (25), as expressed by

$$\sigma_n = K_L \bar{\sigma}_v \tag{27}$$

where the coefficient K_L is given by

$$K_L = \frac{3k_1 \cos^2\theta + 3k_2 \sin^2\theta + 3(K_p - 1)k_3}{K_p \cos^2\omega + 3 - \cos^2\omega} \tag{28}$$

in which

$$k_1 = K_p \cos^2\omega + \sin^2\omega \tag{29}$$

$$k_2 = K_p \sin^2\omega + \cos^2\omega \tag{30}$$

$$k_3 = \frac{1}{2} \sin 2\omega \sin 2\theta \tag{31}$$

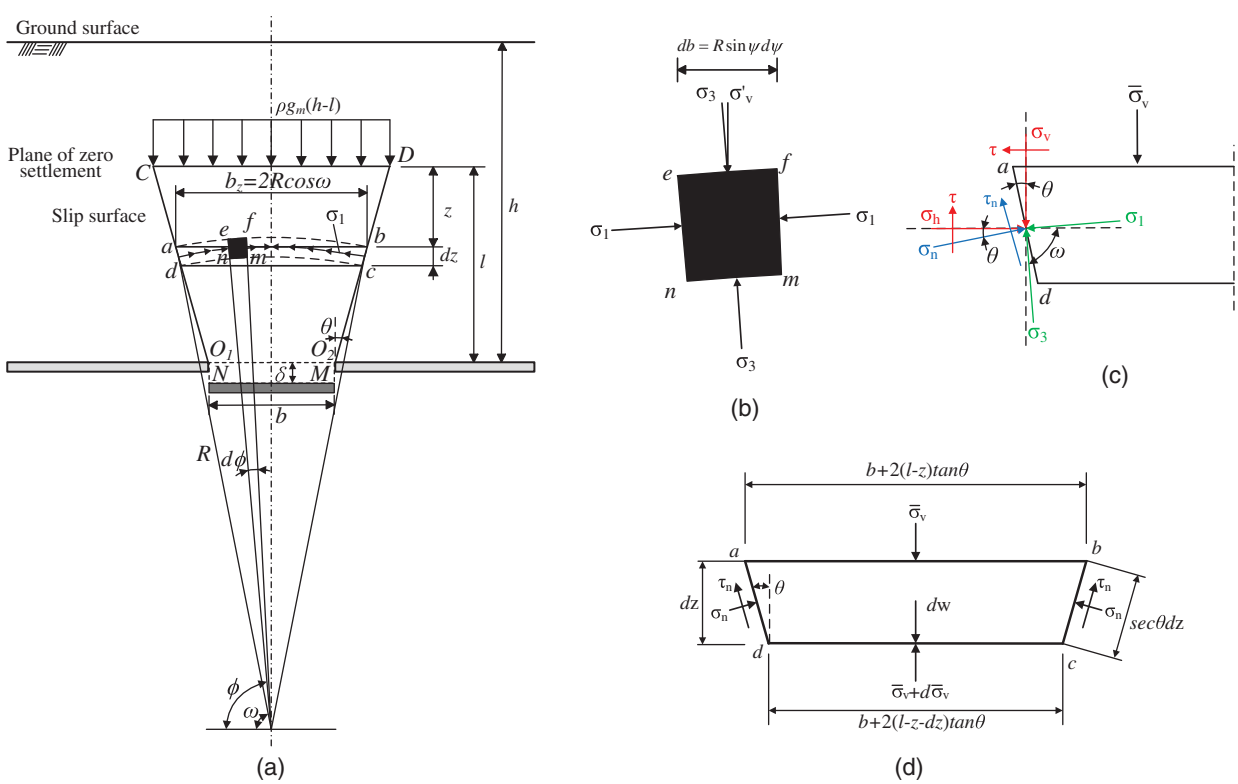

Fig. 11. Theoretical model of stress arching above trapdoor: (a) global stress analysis of stress arching under nonlimit equilibrium state; (b) stress state of second-order differential element efmn; (c) stress state on lateral surface of differential strip abcd; and (d) stress analysis of differential strip abcd.

Downloaded from ascelibrary.org by University of Liverpool on 07/22/25. Copyright ASCE. For personal use only; all rights reserved.

Gravity-Related Soil Pressure on Trapdoor

The weight of the differential strip abcd, dw [Fig. 11(d)], can be calculated by

$$dw = \rho g_m[b + 2(l - z)\tan\theta]dz \tag{32}$$

in which the infinitesimal $(dz)^2$-related items have been ignored.

Because the differential strip abcd reaches the limit equilibrium state, a vertical force balance equation for the strip can be built with the form

$$\frac{d\bar{\sigma}_v}{dz} = \frac{2[(1 - K_L)\tan\theta - K_L\tan\varphi]}{b + 2(l - z)\tan\theta}\bar{\sigma}_v + \rho g_m \tag{33}$$

The planetary regolith simulant above the plane of zero settlement remains in the k_0 state. It still transfers an initial geostatic soil pressure to the planetary regolith simulant beneath it, as expressed by

$$\bar{\sigma}_v|_{z=0} = \rho g_m(h - l) \tag{34}$$

An analytic solution for the average vertical stress in Eq. (33) is obtained after considering the boundary condition Eq. (34), as given by

$$\bar{\sigma}_v = \rho g_m\left[\frac{2z\tan\theta + T_2}{2\tan\theta - T_1} + T_3\left(\frac{2z\tan\theta + T_2}{T_2}\right)^{T_1/(2\tan\theta)}\right] \tag{35}$$

in which

$$T_1 = 2[(K_L - 1)\tan\theta + K_L\tan\varphi] \tag{36}$$

$$T_2 = -b - 2l\tan\theta \tag{37}$$

$$T_3 = h - 1 - \frac{T_2}{2\tan\theta - T_1} \tag{38}$$

The soil pressure acting on the trapdoor is finally obtained when the height of the slip surfaces (l) is substituted for z in Eq. (35), as expressed by

$$\sigma_{\text{door}} = \rho g_m\left[\frac{2l\tan\theta + T_2}{2\tan\theta - T_1} + T_3\left(\frac{2l\tan\theta + T_2}{T_2}\right)^{T_1/(2\tan\theta)}\right] \tag{39}$$

The relationship between the height of the slip surfaces and the trapdoor displacement can be obtained based on the equilibrium of particle volume surrounded by the slip surfaces, the plane of zero settlement, and the trapdoor. Before moving the trapdoor down, the total particle volume in this region can be expressed as

$$V_{s\text{ini}} = \frac{bl + l^2\tan\theta}{1 + e_0} \tag{40}$$

where e_0 = initial void ratio of the planetary regolith simulant.

The perturbed particles can be divided into two parts after moving the trapdoor down [Fig. 11(a)]: (1) those inside the region O_1CDO_2; and (2) the other part inside the region O_1O_2MN. The particle volume inside the region O_1CDO_2 is obtained by integrating the particles volume inside the differential strip abcd, as given by

$$V_{s1} = \int_0^l \frac{[b + 2(l - z)\tan\theta]dz}{1 + e(z)} \tag{41}$$

where $e(z)$ = height-related void ratio, which is determined by the vertical soil pressure [Eq. (35)] and the e-p relationship for the planetary regolith simulant. The particle volume inside the region O_1O_2MN can be obtained after assuming the vertical soil pressure uniformly distributed in this region

$$V_{s2} = \frac{b\delta}{1 + e(z)|_{z=l}} \tag{42}$$

Finally, the equilibrium of the particle volume gives

$$V_{s\text{ini}} = V_{s1} + V_{s2} \tag{43}$$

according to which the trapdoor displacement can be obtained as

$$\delta = \frac{1 + e(z)|_{z=l}}{b}\left\{\frac{bl + l^2\tan\theta}{1 + e_0} - \int_0^l \frac{[b + 2(l - z)\tan\theta]dz}{1 + e(z)}\right\} \tag{44}$$

Comparative Analyses

Fig. 12 demonstrates the predicted normalized soil pressures on the trapdoor under various gravities, and compares these the trapdoor experimental results. The predicted soil pressure shows an evolution that is similar to that of the experimental results both with respect to the trapdoor displacement and with respect to the gravity. The theoretical results in Fig. 12 further confirm the conclusion observed from experiments that gravity weakens the soil arching in the granular planetary regolith. Both the theoretical and experimental results suggest that the soil arching tends to stabilize with further increases in gravity. The apparent influence seems only to happen at lower values of gravity. This may have important implications in practice for off-earth geotechnical engineering because the gravity on these planets and asteroids is generally significantly less than $1.0g$.

The predicted soil pressures show good agreement with the experimental results under low gravity conditions. However, a deviation occurs under $2.0g$ gravity condition. This deviation may result from both the measurement error in the experiments and deviations in the theoretical solution. The effects of gravity-induced stress gradient on the critical internal friction angle and the dilation angle [Eqs. (13) and (14)] are both fitted based on limited data from the numerical triaxial tests. However, they play key roles in the presented theoretical solution. More work is needed to seek an accurate relationship between the gravity and the interparticle friction behavior of geomaterials. On the other hand, the absence of the weak interparticle cohesion in theoretical solution may also contribute to this deviation.

The interparticle friction resistance plays an important role in forming soil arching and transferring soil pressure. As mentioned previously, previous studies have demonstrated that the interparticle friction resistance of geomaterials is related to both the stress level and the gravity. Because the gravity is a primary load source in geotechnical engineering, the stress level essentially also results from the gravity. As demonstrated in the theoretical solution, the effect of gravity on soil arching in planetary regolith simulant is accounted for by way of the gravity-induced stress level and the gravity-induced stress gradient. The gravity-related influence on the soil pressure acting on the trapdoor (Fig. 12) actually results from both the gravity-induced stress level and the gravity-induced stress gradient. Furthermore, Figs. 13(a and b) demonstrate the theoretical predictions of the soil pressure on the trapdoor considering a constant interparticle friction resistance and considering only a stress level–related interparticle friction resistance, respectively.

Fig. 13(a) indicates that the soil pressure on the trapdoor only remains an unobvious difference at various gravities. However, it

Downloaded from ascelibrary.org by University of Liverpool on 07/22/25. Copyright ASCE. For personal use only; all rights reserved.

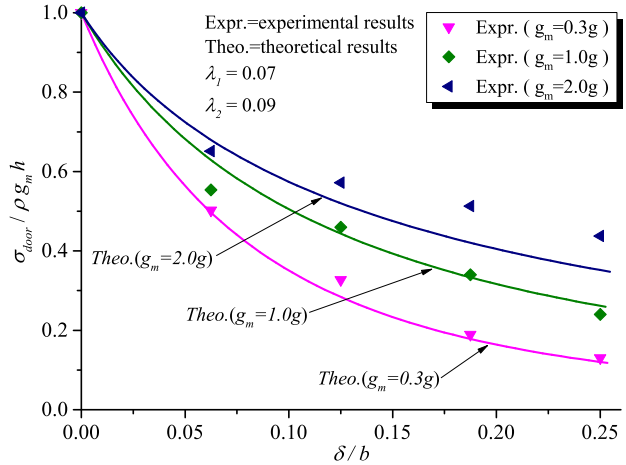

Fig. 12. Comparison of normalized experimental and theoretical soil pressures on trapdoor.

can still be observed that the soil pressure decreases when the gravity increases from $0.3g$ to $2.0g$. This slight decrease suggests that the arching effect is enhanced by the increasing gravity when considering a constant interparticle friction resistance. Because a gravity-independent interparticle friction resistance is used, this enhancement essentially results from the effect of the gravity-induced stress level on the consolidation (i.e., e–p relationship) of the planetary regolith simulant. The planetary regolith simulant above the trapdoor drops down at the moment the trapdoor is moved downward, and it is subsequently reconsolidated by the gravity-related vertical stress. During this process, the slip surfaces arise and extend above the trapdoor. The height of the slip surfaces, as expressed in Eq. (44), is closely related to the void ratio of the reconsolidated planetary regolith simulant [i.e., $e(z)$ in Eq. (44)]. The void ratio decreases when increasing the gravity, which further results in an increase in the height of the slip surfaces. Eq. (35) indicates that the soil pressure acting on the trapdoor, therefore, decreases with the increasing height of the slip surfaces. In other words, the arching effect is enhanced.

The soil pressure on the trapdoor shows apparent independence from gravity when considering the effect of stress level on the interparticle friction resistance [Fig. 13(b)]. Similar to the experimental results, the soil pressure increased when the gravity increased. However, its increment was significantly smaller than that when considering both the effect of the gravity-induced stress level and the effect of the gravity-induced stress gradient (Fig. 12). In the latter case, the theoretical results showed better agreement with experimental results. This agreement, on the one hand, further proves that both the gravity-induced stress level and the gravity-induced stress gradient play important roles in soil arching. On the other hand, this implies that the theoretical solution presented here may give a reasonable prediction of the soil pressure on trapdoor-like underground structures in off-earth geotechnical engineering applications.

Conclusions

Off-earth base construction and mineral mining will be the primary missions when humans first begin to land on other planets or asteroids. However, the extreme environments on the surfaces of these bodies pose a significant challenge to geotechnical engineering, especially because of the difference in gravity. Previous observations have found out that the surfaces of most planets and asteroids are covered by a layer of electrostatically charged granular regolith.

This paper studied the effect of gravity on the arching effect in planetary regolith above deeply buried structures with a series of trapdoor experiments. A fine-grained, magnetically sensitive planetary regolith simulant was adopted for physical modeling and simulating the weak interparticle cohesion that exists. This interparticle cohesion was qualitatively simulated by a constant interparticle magnetic force resulting from magnetization. Extraterrestrial gravities, with intensities ranging from $0.3g$ to $2.9g$, were simulated by applying a uniform magnetic body force to the planetary regolith simulant.

The trapdoor experiments indicated that the unloading rate for soil pressure on the trapdoor and the reduction in soil pressure are both strongly affected by gravity. Both the soil pressure and normalized soil pressure unloaded rapidly at first, followed by a slow and continues reduction when the trapdoor was moved down at a lower gravity. The unloading rate for soil pressure increased when gravity increased; however, that of the normalized soil pressure decreased. Both the soil pressure and normalized soil pressure acting on the trapdoor increased when gravity increased at a certain trapdoor displacement. The soil pressure reduction increased when gravity increased. However, its normalized quantity decreased. With further increases in gravity, a stable and gravity-related normalized soil pressure state appeared to be reached.

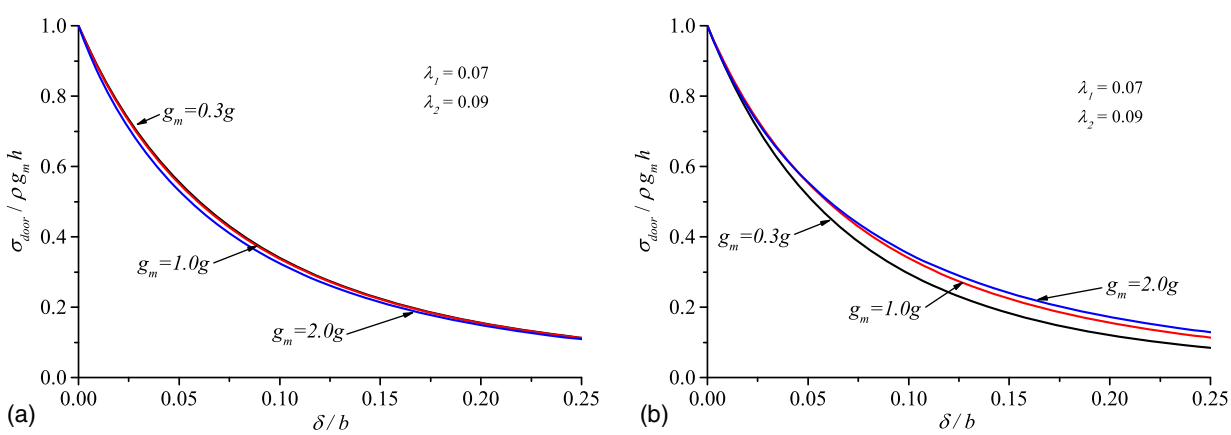

Fig. 13. Theoretical relationship between normalized soil pressure on trapdoor and trapdoor displacement: (a) when considering constant interparticle friction resistance; and (b) when considering effect of stress level on interparticle friction resistance.

Downloaded from ascelibrary.org by University of Liverpool on 07/22/25. Copyright ASCE. For personal use only; all rights reserved.

A gravity-related theoretical solution for soil pressure on the trapdoor was proposed. Because the soil arching is closely related to the interparticle friction resistance, this theory considered the effects of the gravity-induced stress level and the gravity-induced stress gradient on the critical friction angle and the dilation angle. A differential equation for the average vertical stress was built based on a pair of gravity-related slip surfaces and the major principal stress arching between them. Then an equation relating the height of the slip surfaces and the trapdoor displacement was derived based on the equilibrium of particles volume inside the perturbed region. Solving these two equations gave a solution for the gravity-related soil pressure acting on the trapdoor. Good agreement was observed between the predicted soil pressures on the trapdoor and the experimental results.

Because the gravities on extraterrestrial planets and asteroids are generally less than $2.0g$, the experimental results and the theoretical solution presented in this study provide a simple approach to estimate the downward loading on trapdoor-like underground structures in off-earth engineering. Further work may focus on seeking an accurate relationship between the gravity-induced stress gradient and the interparticle friction resistance of the granular planetary regoliths.

Acknowledgments

This work was supported by the 111 Project of China (Grant No. B14021), the Newton Fund of UK-China Research and Innovation Partnership Fund (Grant No. 201503780039), the National Natural Science Foundation of China (Grant No. 41772338), the Fundamental Research Funds for the Central Universities (Grant No. 2015XKQY17), and the GeoEnergy Research Centre (GERC), United Kingdom. This support is gratefully acknowledged.

References

Arvidson, R. E., J. L. Gooding, and H. J. Moore. 1989. "The Martian surface as imaged, sampled, and analyzed by the Viking landers." *Rev. Geophys.* 27 (1): 39–60. https://doi.org/10.1029/RG027i001p00039.

Bell, L. 2010. "Top-level considerations for planning lunar/planetary habitat structures." *J. Aerosp. Eng.* 24 (3): 349–360. https://doi.org/10.1061/(ASCE)AS.1943-5525.0000062.

Boles, W. W., W. D. Scott, and J. F. Connolly. 1997. "Excavation forces in reduced gravity environment." *J. Aerosp. Eng.* 10 (2): 99–103. https://doi.org/10.1061/(ASCE)0893-1321(1997)10:2(99).

Bolton, M. D. 1986. "The strength and dilatancy of sands." *Géotechnique* 36 (1): 65–78. https://doi.org/10.1680/geot.1986.36.1.65.

Bui, H. H., T. Kobayashi, R. Fukagawa, and J. C. Wells. 2009. "Numerical and experimental studies of gravity effect on the mechanism of lunar excavations." *J. Terramech.* 46 (3): 115–124. https://doi.org/10.1016/j.jterra.2009.02.006.

Carrier, W. D., J. K. Mitchell, and A. Mahmood. 1973. "The nature of lunar soil." *J. Soil Mech. Found. Div.* 99 (10): 813–832.

Chen, G. 2014. "Study on soil arching effect and active earth pressure for cylindrical wall." Ph.D. thesis, China Univ. of Mine and Technology.

Chevalier, B., G. Combe, and P. Villard. 2012. "Experimental and discrete element modeling studies of the trapdoor problem: Influence of the macro-mechanical frictional parameters." *Acta Geotech.* 7 (1): 15–39. https://doi.org/10.1007/s11440-011-0152-5.

Costa, Y. D., J. G. Zornberg, B. S. Bueno, and C. L. Costa. 2009. "Failure mechanisms in sand over a deep active trapdoor." *J. Geotech. Geoenviron.* 135 (11): 1741–1753. https://doi.org/10.1061/(ASCE)GT.1943-5606.0000134.

Costes, N. C., G. T. Cohron, and D. C. Moss. 1971. "Cone penetration resistance test-an approach to evaluating in-place strength and packing characteristics of lunar soils." In Vol. 2 of *Proc., Lunar and Planetary Science Conf.*, 1973–1987. Houston: Lunar Science Institute, NASA.

CSBTS (China State Bureau of Quality and Technical Supervision). 1999. "National standard of the People's Republic of China: Standard for soil test method." GB/T50123-1999. Beijing: CSBTS.

Elvis, M. 2012. "Let's mine asteroids-for science and profit." *Nature* 485 (7400): 549. https://doi.org/10.1038/485549a.

Eyssa, Y. M., and R. W. Boom. 1976. "Magnetic and coagulation forces on a suspension of magnetic particles." *Int. J. Miner. Process.* 3 (1): 1–8. https://doi.org/10.1016/0301-7516(76)90010-7.

Forgan, D. H., and M. Elvis. 2011. "Extrasolar asteroid mining as forensic evidence for extraterrestrial intelligence." *Int. J. Astrobiol.* 10 (4): 307–313. https://doi.org/10.1017/S1473550411000127.

Goodings, D. J., C. P. Lin, R. D. Dick, W. L. Fourney, and L. E. Bernold. 1992. "Modeling effects of chemical explosives for excavation on moon." *J. Aerosp. Eng.* 5 (1): 44–58. https://doi.org/10.1061/(ASCE)0893-1321(1992)5:1(44).

Guo, P., and S. Zhou. 2013. "Arch in granular materials as a free surface problem." *Int. J. Numer. Anal. Methods Geomech.* 37 (9): 1048–1065. https://doi.org/10.1002/nag.1137.

Handy, R. L. 1985. "The arch in soil arching." *J. Geotech. Eng.* 111 (3): 302–318. https://doi.org/10.1061/(ASCE)0733-9410(1985)111:3(302).

Harrop-Williams, K. 1989. "Arch in soil arching." *J. Geotech. Eng.* 115 (3): 415–419. https://doi.org/10.1061/(ASCE)0733-9410(1989)115:3(415).

Hicher, P. Y., and C. S. Chang. 2008. "A constitutive model for lunar soil." In *Earth and space 2008: Engineering, science, construction, and operations in challenging environments*, edited by W. K. Binienda, 1–8. Akron, OH: Univ. of Akron.

Iglesia, G. R., H. H. Einstein, and R. V. Whitman. 2011. "Validation of centrifuge model scaling for soil systems via trapdoor tests." *J. Geotech. Geoenviron.* 137 (11): 1075–1089. https://doi.org/10.1061/(ASCE)GT.1943-5606.0000517.

Iglesia, G. R., H. H. Einstein, and R. V. Whitman. 2014. "Investigation of soil arching with centrifuge tests." *J. Geotech. Geoenviron.* 140 (2): 04013005. https://doi.org/10.1061/(ASCE)GT.1943-5606.0000998.

Kobayashi, T., Y. Fujiwara, J. Yamakawa, N. Yasufuku, and K. Omine. 2010. "Mobility performance of a rigid wheel in low gravity environments." *J. Terramech.* 47 (4): 261–274. https://doi.org/10.1016/j.jterra.2009.12.001.

Ladanyi, B., and B. Hoyaux. 1969. "A study of the trap-door problem in a granular mass." *Can. Geotech. J.* 6 (1): 1–14. https://doi.org/10.1139/t69-001.

Leonovich, A. K., V. V. Gromov, A. V. Rybakov, V. K. Petrov, P. S. Pavlov, I. I. Cherkasov, and V. V. Shvarev. 1971. "Studies of lunar ground mechanical properties with the self-propelled Lunokhod-1." In *Peredvizhnaya Laboratoriya na Luna-Lunokhod-1*, 120–135. Moscow: Nauka.

Li, R., G. Zhou, G. Cheng, M. R. Hall, and X. Zhao. 2018. "Geotechnical magnetic–similitude–gravity model testing method." *Int. J. Phys. Model. Geotech.* 1–19. https://doi.org/10.1680/jphmg.17.00014.

Li, R. L., G. Q. Zhou, G. Z. Chen, G. P. Shi, and J. Li. 2012. "Development of a new geo-mechanical magnetic sensing soils similar material." [In Chinese.] *J. Funct. Mater.* 43 (19): 2620–2623.

Luo, X. Q., S. G. Cheng, Z. H. Zhang, and K. Tang. 2011. "Study of similarity theory of geomechanical model test in electromagnetic field." [In Chinese.] *Rock Soil Mech.* 32 (4): 1035–1040.

Marston, A., and A. O. Anderson. 1913. *The theory of loads on pipes in ditches and tests of cement and clay drain tile and sewer pipe.* Bulletin 31. Ames, IA: Iowa Engineering Experiment Station, Iowa State College.

McKay, D. S., G. Heiken, A. Basu, G. Blanford, S. Simon, R. Reedy, B. M. French, and J. Papike. 1991. "The lunar regolith." In *Lunar sourcebook*, edited by G. H. Heiken, D. T. Vaniman, and B. M. French, 285–356. Cambridge, UK: Cambridge University Press.

Melzer, K. J. 1974. "Methods for investigating the strength characteristics of a lunar soil simulant." *Géotechnique* 24 (1): 13–20. https://doi.org/10.1680/geot.1974.24.1.13.

Mitchell, J. K., W. N. Houston, R. F. Scott, N. C. Costes, W. D. Carrier III, and L. G. Bromwell. 1972. "Mechanical properties of lunar soil: Density, porosity, cohesion and angle of internal friction." In Vol. 3

Downloaded from ascelibrary.org by University of Liverpool on 07/22/25. Copyright ASCE. For personal use only; all rights reserved.

of *Proc., 3rd Lunar Science Conf.*, 3235–3253. Houston: Lunar Science Institute, NASA.

Moore, H. J., D. B. Bickler, J. A. Crisp, H. J. Eisen, J. A. Gensler, A. F. C. Haldemann, J. R. Matijevic, L. K. Reid, and F. Pavlics. 1999. "Soil-like deposits observed by Sojourner, the Pathfinder rover." *J. Geophys. Res.* 104 (E4): 8729–8746. https://doi.org/10.1029/1998JE900005.

Oravec, H. A., X. Zeng, and V. M. Asnani. 2010. "Design and characterization of GRC-1: A soil for lunar terramechanics testing in Earth-ambient conditions." *J. Terramech.* 47 (6): 361–377. https://doi.org/10.1016/j.jterra.2010.04.006.

Papamichos, E., I. Vardoulakis, and L. K. Heil. 2001. "Overburden modeling above a compacting reservoir using a trap door apparatus." *Phys. Chem. Earth* 26 (1–2): 69–74. https://doi.org/10.1016/S1464-1895(01)00025-4.

Perkins, S. W., and C. R. Madson. 1996. "Mechanical and load-settlement characteristics of two lunar soil simulants." *J. Aerosp. Eng.* 9 (1): 1–9. https://doi.org/10.1061/(ASCE)0893-1321(1996)9:1(1).

Perko, H. A., J. D. Nelson, and W. Z. Sadeh. 2001. "Surface cleanliness effect on lunar soil shear strength." *J. Geotech. Geoenviron.* 127 (4): 371–383. https://doi.org/10.1061/(ASCE)1090-0241(2001)127:4(371).

Rover Team. 1997. "Characterization of the Martian surface deposits by the Mars Pathfinder rover, Sojourner." *Science* 278 (5344): 1765–1768. https://doi.org/10.1126/science.278.5344.1765.

Ruess, F., J. Schaenzlin, and H. Benaroya. 2006. "Structural design of a lunar habitat." *J. Aerosp. Eng.* 19 (3): 133–157. https://doi.org/10.1061/(ASCE)0893-1321(2006)19:3(133).

Shkuratov, Y. G., and N. V. Bondarenko. 2001. "Regolith layer thickness mapping of the Moon by radar and optical data." *Icarus* 149 (2): 329–338. https://doi.org/10.1006/icar.2000.6545.

Stone, K. J., and D. M. Wood. 1992. "Effects of dilatancy and particle size observed in model tests on sand." *Soils Found.* 32 (4): 43–57. https://doi.org/10.3208/sandf1972.32.4_43.

Sture, S., N. C. Costes, S. N. Batiste, M. R. Lankton, K. A. AlShibli, B. Jeremic, R. A. Swanson, and M. Frank. 1998. "Mechanics of granular materials at low effective stresses." *J. Aerosp. Eng.* 11 (3): 67–72. https://doi.org/10.1061/(ASCE)0893-1321(1998)11:3(67).

Sullivan, R., R. Anderson, J. Biesiadecki, T. Bond, and H. Stewart. 2011. "Cohesions, friction angles, and other physical properties of Martian regolith from Mars Exploration Rover wheel trenches and wheel scuffs." *J. Geophys. Res.* 116 (E2): E02006. https://doi.org/10.1029/2010JE003625.

Tanaka, T., and T. Sakai. 1993. "Progressive failure and scale effect of trap-door problems with granular materials." *Soils Found.* 33 (1): 11–22. https://doi.org/10.3208/sandf1972.33.11.

Terzaghi, K. 1936. "Stress distribution in dry and in saturated sand above a yielding trap-door." In Vol. 1 of *Proc., 1st Int. Conf. on Soil Mechanics and Foundation Engineering*, 307–311. Cambridge, MA: Harvard University Press.

Terzaghi, K. 1943. *Theoretical soil mechanics*. New York: Wiley.

Valles, J. M., H. J. Maris, G. M. Seidel, J. Tang, and W. Yao. 2005. "Magnetic levitation-based Martian and Lunar gravity simulator." *Adv. Space Res.* 36 (1): 114–118. https://doi.org/10.1016/j.asr.2005.01.081.

Veverka, J., et al. 2000. "NEAR at Eros: Imaging and spectral results." *Science* 289 (5487): 2088–2097. https://doi.org/10.1126/science.289.5487.2088.

Zou, M., S. Fan, R. Shi, Y. Yang, and J. Li. 2015. "Effect of gravity on the mechanical properties of lunar regolith tested using a low gravity simulation device." *J. Terramech.* 60 (4): 11–22. https://doi.org/10.1016/j.jterra.2015.04.003.

Downloaded from ascelibrary.org by University of Liverpool on 07/22/25. Copyright ASCE. For personal use only; all rights reserved.